/// Ultra compact space saving 8-pole relay module

Rugged relay module for extreme reliability, within long endurance applications and harsh environments

D8M-U200 relay module

Part of D-platform

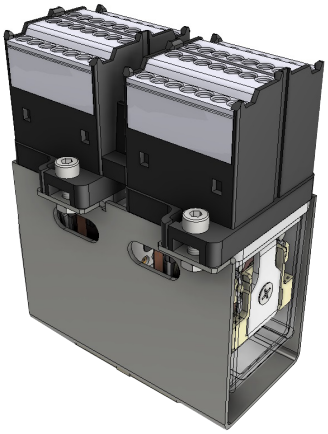

Description

The D8M-U200 relay module is a form, fit and function solution to replace all kind of (mini) contactors with a maximum of 8 contacts. The module consists of an 8-pole relay, spring clamp terminal connections and a bracket with surface/wall or 35 mm rail mounting.

By applying the D8M-U200 relay module all specifications of the standard D8-U200 relay are valid. The spring clamp terminals provides 2 connection points per contact. Also latching KDN-U200 relays can be used inside the module.

Thanks to its small dimensions the module can be fitted in most places where standard contactors are used.

Application

Typical applications are dusty environments where the open construction of a contactor is causing contact problems (dust is gathered between the contacts of the contactor).

Timing diagrams

Instantaneous relay

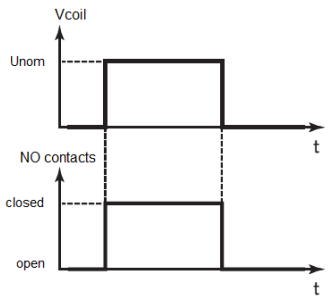

Latching relay

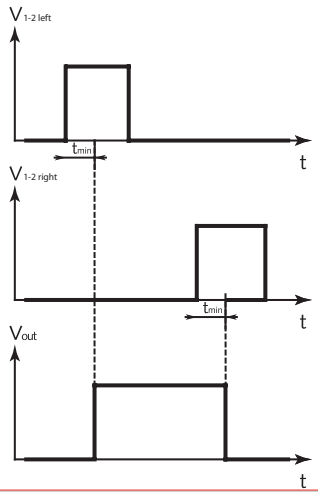

Features

- Ultra compact space saving 8-pole relay module
- Easy replacement of contactors
- Module consists of 8-pole relay and socket
- All 8-pole Mors Smitt relay configurations are possible
- Back EMF suppression diode (standard in instantaneous version)
- Magnetic arc blow-out
- Sturdy spring clamp terminals
- Twin connection per relay contact
- Terminals at front side
- Surface/wall mounting standard, 35 mm rail mounting optional

Connection diagram

Instantaneous relay

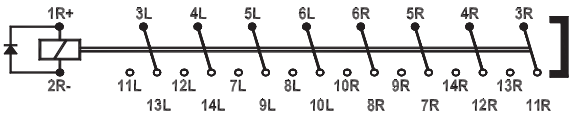

Latching relay

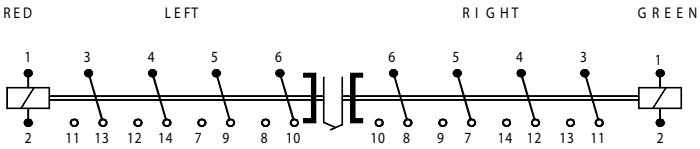

Please note the relay will leave production in open state (with open armature at the left side) with all contacts in the position shown in the connection diagram. Due to severe shocks far exceeding maximum levels mentioned in IEC 61373 (Category I, Class B, Body mounted), it can happen the left armature closes and stay closed. Therefore after installation all relays must be checked on correct state of the contacts and activate both coils 10 times alternately for correct operation.

Railway compliancy

EN 50155	EN 50121
IEC 60571	EN 45545-2
IEC 60077	NF F16-101/102
IEC 60947	NF F 62-002
IEC 61373	

Relay module
D8M-U200

Options

- Low temperature (-50 °C), max. contact current 8 A
- Gold plated contacts
- Extra dust protection (for relays)
- Back EMF protection diode (for latching versions)
- $AgSnO_2$ contacts, high resistant to welding
- No magnetic arc blow-out
- Polarisation diode
- Double zener diode
- Double make / double break contacts (-50 °C)
- No diode

Remark: Not all combinations possible

Dimensions (mm)

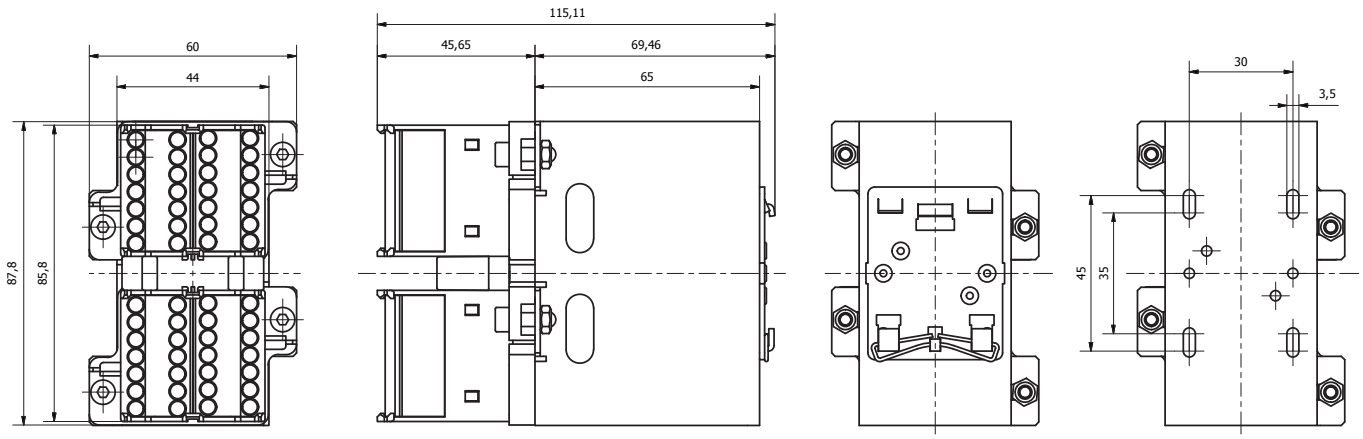

For more detailed technical specifications, drawings and ordering information, go to the product page on www.morssmitt.com

Over 10 million Mors Smitt relays in use in rail transport applications worldwide!

Mors Smitt Asia Ltd.
Unit B & C, 25/F., Casey Aberdeen House
38 Heung Yip Road, Wong Chuk Hang
Hong Kong
Tel: +852 2343 555
sales.msa@wabtec.com

Mors Smitt France SAS
2 Rue de la Mandinière
72300 Sablé-sur-Sarthe, France
Tel: +33 (0) 243 92 82 00
sales.msf@wabtec.com

Mors Smitt UK Ltd.
Graycar Business Park,
Burton on Trent, DE13 8EN, UK
Tel: +44 (0)1283 357 263
sales.msuk@wabtec.com

Wabtec Netherlands B.V.
Vrieslantlaan 6,
3526 AA, Utrecht, Netherlands
Tel: +31 (0)30 288 1311
sales.msbv@wabtec.com

Mors Smitt Technologies Ltd.
1010 Johnson Drive,
Buffalo Grove, IL 60089-6918, USA
Tel: +1 847 777 6497
salesmst@wabtec.com

RMS Mors Smitt
6 Anzed Court,
Mulgrave, VIC 3170, Australia
Tel: +61 (0)3 8544 1200
sales.rms@wabtec.com

Technical specifications

Relay module
D8M-U200

Coil characteristics - instantaneous versions

Operating times at nominal voltage (typical):	
Pull-in time	≤ 20 ms
Release time	≤ 21 ms
Inductance L/R at Unom (typical):	
Energized	11 ms
Released	8 ms
Operating voltage range	0.7 - 1.25 Unom

Type	U_{nom} (VDC)	U_{min} (VDC)	U_{max} (VDC)	$U_{drop-out}$ (VDC)	R_{coil} * (Ω)	P_{nom} (W)
D8M-U201-D800	24	16.8	30	2.4	233	2.8
D8M-U202-D800	48	33.6	60	4.8	680	2.8
D8M-U203-D800	72	50.4	90	7.2	1590	2.8
D8M-U204-D800	110	77	137.5	11.0	3769	2.8
D8M-U205-D800	96	67.2	120	9.6	3547	2.8
D8M-U206-D800	12	8.4	15	1.2	76	2.8
D8M-U207-D800	36	25.2	45	3.6	680	2.8

Other types on request
* The Rcoil is measured at room temperature and has a tolerance of ± 10%

Remarks:
- Umin is the must-operate voltage at which the relay has picked up in all circumstances (worst-case situation), in practice the relay picks up at a lower voltage
- Udrop-out is the must-release voltage at which the relay has dropped-out in all circumstances (worst-case situation), in practice the relay drops out at a higher voltage
- Always select the nominal voltage as close as possible to the actual voltage in the application

Remark: In June 2019 the coil tape color is changed to yellow. This change has no effect on any of the relay specifications or technical performance.

Coil characteristics - latching versions

Operating times at nominal voltage (typical):	
Minimum impulse time (t_{min})	50 ms
Bounce time N/O contacts	≤ 4 ms
Bounce time N/C contacts	≤ 8 ms
Inductance L/R at Unom (typical):	
Energized	11 ms
Released	8 ms
Operating voltage range	70 % - 125 % Unom

Type	U_{nom} (VDC)	U_{min} (VDC)	U_{max} (VDC)	$U_{drop-out}$ (VDC)	R_{coil} * (Ω)	P_{nom} (W)
D8M-U201-B800	24	16.8	30	9.6	178	3.2
D8M-U202-B800	48	33.6	60	19.2	666	3.3
D8M-U203-B800	72	50.4	90	28.8	1580	3.3
D8M-U204-B800	110	77	137.5	44.0	3850	3.0
D8M-U205-B800	96	67.2	120	38.4	3600	2.6
D8M-U206-B800	12	8.4	15	4.8	94	3.3
D8M-U207-B800	36	25.2	45	14.4	370	3.2

Other types on request
* The Rcoil is measured at room temperature and has a tolerance of ± 10%

Remarks:
- Umin is the must-operate voltage at which the relay has picked up in all circumstances (worst-case situation), in practice the relay picks up at a lower voltage
- Udrop-out is the must-release voltage at which the relay has dropped-out in all circumstances (worst-case situation), in practice the relay drops out at a higher voltage
- Always select the nominal voltage as close as possible to the actual voltage in the application

Remark: In June 2019 the coil tape color is changed to yellow. This change has no effect on any of the relay specifications or technical performance.

Operating range at various temperatures - instantaneous versions

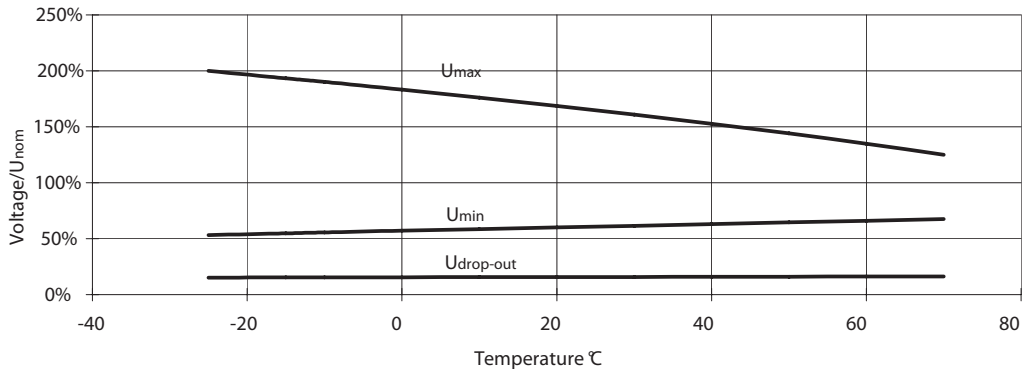

Contact characteristics

Amount and type of contacts		8 C/O
Maximum make current		16 A
Peak inrush current	NF F 62-002	200 A (withstand > 10 x 200 A @ 10 ms, 1 min)
Maximum continuous current	IEC 60947	10 A
Maximum switching voltage		250 VDC, 440 VAC
Minimum switching voltage		12 V
Minimum switching current		10 mA
Maximum breaking capacity (50.000 operations)		72 VDC, 5 A (L/R ≤ 40 ms) 110 VDC, 10 A (resistive load) 110 VDC, 0.5 A (L/R ≤ 40 ms)
Maximum contact resistance		15 mΩ
Material		Ag standard (optional $AgSnO_2$, Au on Ag)
Contact gap		0.7 mm
Contact force		> 200 mN

Electrical characteristics

Dielectric strength EN50155	Pole-pole	IEC 60255-5	4 kV, 50 Hz, 1 min
	Cont-coil	IEC60077	2.5 kV, 50 Hz, 1 min
	Open contacts		2.5 kV; 50 Hz; 1 min
Pulse withstanding		IEC 60255-5	5 kV (1.2/50 µs)

Mechanical characteristics

Mechanical life	Instantaneous versions: 10 x 10^6 operations Latching versions: 2 x 10^6 operations
Maximum switching frequency	Mechanical: 3600 ops/h Electrical: 1200 ops/h
Weight: Surface / wall mounting 35 mm rail mounting	 630 g 660 g

Mounting	Surface / wall and 35 mm rail
Socket contacts Wire size Wire stripping length	 0.08 - 2.5 mm^2 6 mm
Max. torque value mounting screws	1.0 Nm

Environmental characteristics

Environmental	EN 50125-1 and IEC 60077-1
Vibration	IEC 61373, Category I, Class B, Body mounted
Shock	IEC 61373, Category I, Class B, Body mounted
Operating temperature	-25 °C...+70 °C (optional: -40/-50 °C)
Humidity	95% (condensation is permitted temporarily)
Maximum altitude	2000 meter. Higher altitudes are possible but have consequences mentioned in IEC 60664 (for example 5000 meter with bigger clearance distance)
Salt mist	IEC 60068-2-11, class ST4
Damp heat	IEC 60068-2-30, Test method Db variant 1
Protection	IEC 60529, IP20
Fire & smoke	NF F 16-101, NF F 16-102, EN 45545-2: HL3 for requirements R22, R23, R26
Insulation materials	Cover: polycarbonate Base: polyester

Railway compliancy

EN 50155	Railway applications - Rolling stock - Electronic equipment
IEC 60571	Railway applications - Electronic equipment used on rolling stock
IEC 60077	Railway applications - Electric equipment for rolling stock
IEC 60947	Low-voltage switchgear and controlgear
IEC 61373	Railway applications - Rolling stock equipment - Shock and vibration tests
EN 50121	Railway applications - Electromagnetic compatibility
NF F16-101/102	Railway rolling stock - Fire behavior
EN 45545-2	Railway applications - Fire protection on railway vehicles Part 2: Requirements for fire behavior of materials and components
NF F 62-002	Railway rolling stock - On-off contact relays and fixed connections
IEC 60529	European standard describes the protection class (IP-code)

Relay module
D8M-U200

Illustrations

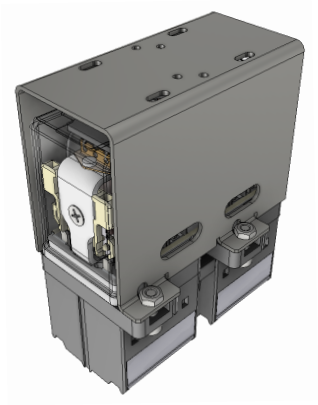

Module for surface/wall mounting

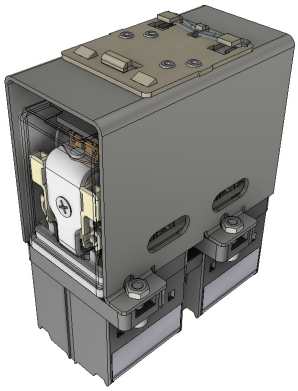

Module 35 mm rail mounting

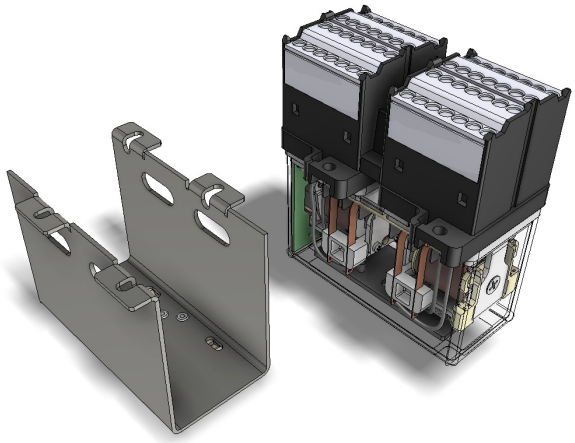

Relay module
D8M-U200

Options

Code	Description	Remark	Cannot be combined with:
Standard options:			
C	Low temperature (-40 ºC for latching) (-50 ºC for instantaneous)	Icontact < 8 A	
D	Back EMF protection diode (for latching versions)	Standard in instantaneous versions	
E*	Au; Gold plated contacts (10 µm)		M
K	Extra dust protection	IP50 Cat 2	
N	No magnetic arc blow-out		
Q	Double zener diode over coil	Maximum allowed peak voltage 180 V, higher voltage will damage the diode.	
Y	Double make/double break contacts	4 C/O DM/DB, -50 °C (instantaneous versions) 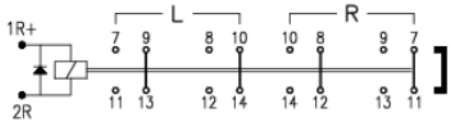 4 C/O DM/DB, -40 °C (latching versions) 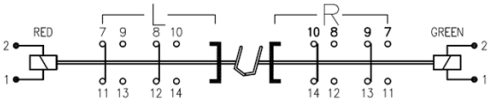 	
R	35 mm rail mounting		
Special options:			
M	$AgSnO_2$; “non-weldable” contacts	Icontact > 100 mA	E

* Gold plated contacts characteristics	
Material	Ag, 10 µm gold plated
Maximum switching voltage	60 V (higher voltages may be possible, contact Mors Smitt for more information)
Maximum switching current	400 mA (at higher rate gold will evaporate, then the standard silver contact rating of minimum 10 mA and 12 V is valid)
Minimum switching voltage	5 V
Minimum switching current	1 mA

Remark: For application support or technical product support, contact your local Mors Smitt sales office (see contact details on last page).

Electrical life expectancy

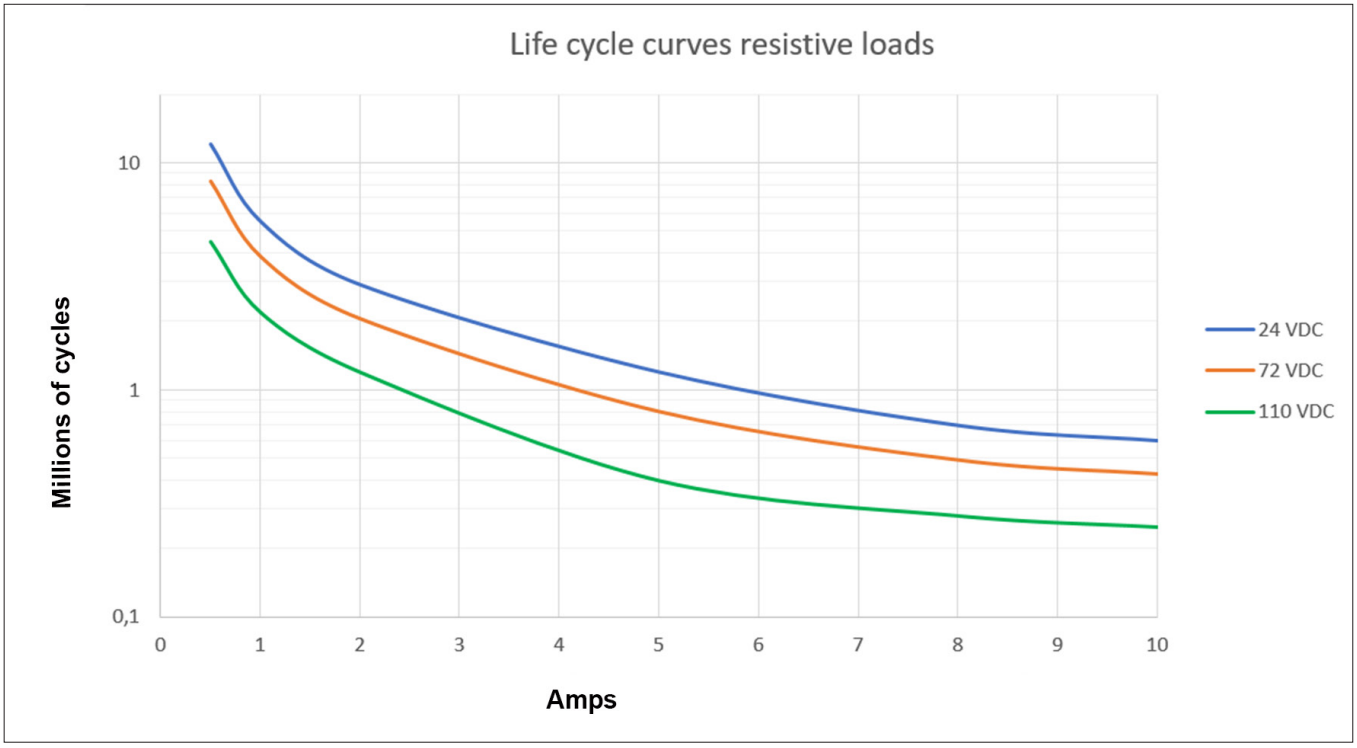

By connecting 2 contacts in series the DC current breaking capacity is increased by 50 %. Electrical lifetime is tested under laboratory conditions with switching frequency 0.33 Hz.

Note: The actual electrical lifetime in the application is affected by the switching frequency, type of contact (N/O or N/C), environmental conditions, etc.

Expected electrical lifetime inductive loads:

Inductance	Voltage	% of resistive load	Remark
15 ms	24 VDC	30 %	
15 ms	72 VDC	25 %	Tested up to 8 A
15 ms	110 VDC	20 %	Tested up to 0.5 A
40 ms	24 VDC	10 %	
40 ms	72 VDC	4 %	Tested up to 5 A
40 ms	110 VDC	2 %	Tested up to 0.5 A

For other contact loads: contact Mors Smitt.

Mounting possibilities/sockets

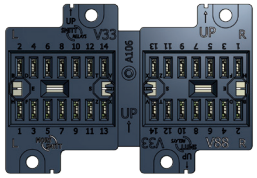 V88	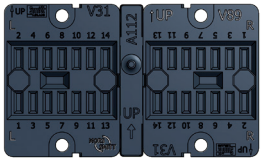 V89			

Panel/flush mounting

338001700	V88	Spring clamp socket, flush mount, rear dual connection (2.5 mm²)
338001850	V89	Faston connection socket, rear dual connection (4.8 x 0.8 mm)

For more details see datasheets of the sockets on www.morssmitt.com

Relay module
D8M-U200

Instructions for use

Installation

Warning!

• Before installation or working on the relay: always disconnect the power supply first!
• Never use silicon in the proximity of the relay.
• Do not use the relay in the presence of flammable gas as the arc generated from switching could cause ignition.

How to install a D8M-U200 module for panel mounting?

A relay with screw mounting bracket can be installed as shown below. Use a screwdriver (type hexagon socket (Allen key) 2.5 mm) to remove the four screws and remove the bracket. Screw the bracket on your panel via the four 5 x 10 mm slots. Screw the D8 relay module on the bracket. The stall torque of the four screws is 1Nm. The modules can be mounted tightly together to save space. After installation connect the wiring according to the terminal identification.

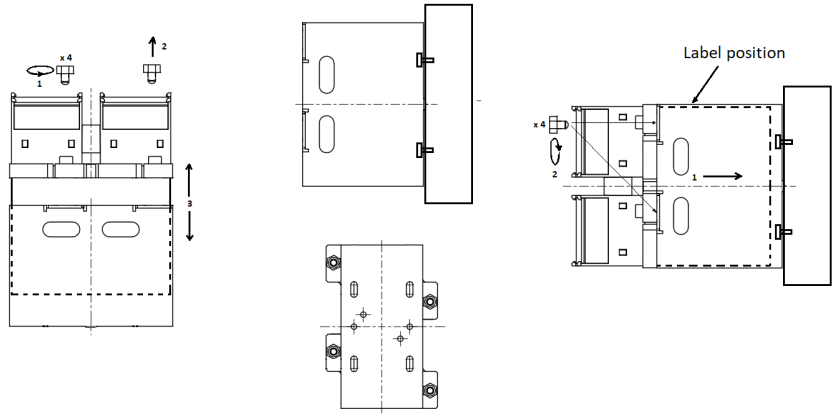

Remove the metal bracket | Screw the bracket on the panel | Fix the relay module in the bracket, make sure the label is upside

How to install a D8M-U200 module on a 35 mm rail?

Install or remove the D8M-U200 module on a 35 mm rail according the instruction as shown.

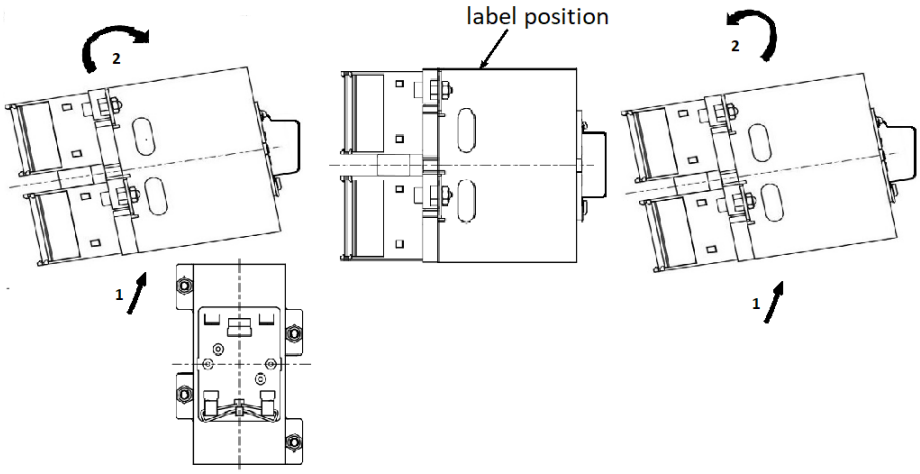

Install the module on the 35 mm rail | Make sure the module label is upside | Remove the module from the 35 mm rail

Make sure the module is installed in a vertical mounting position with the spring at bottom and label on top position as shown in detail. The modules can be mounted tightly together to save space. After installation connect the wiring according to the terminal identification.

How to replace a relay in the D8M-U200 module?

The relay can be removed from the bracket as shown below. Use a screwdriver type hexagon (Allen key) 2.5 mm to remove the four screws and remove the bracket. Move the relay sideways as shown in the second picture. Warning: Up and down movements may cause damage to the coil wire. For installation plug the relay into the socket ensuring there is no gap between the bottom of the relay and the socket. Screw the bracket on the module with the four hexagon screws (stall torque is 1 Nm).

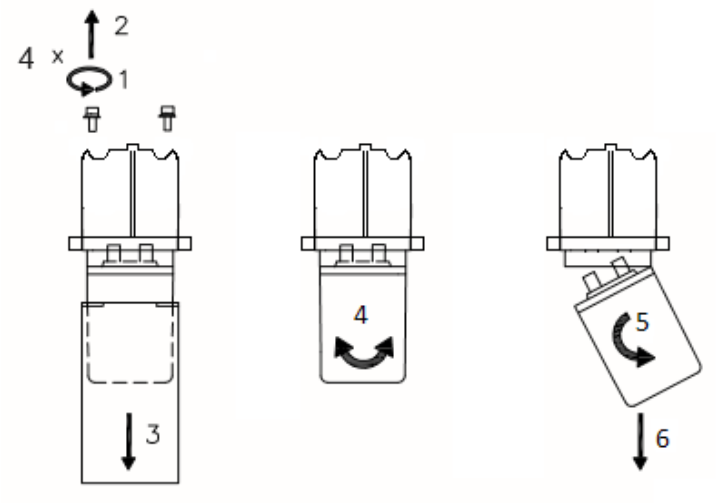

Remove the bracket | Move the relay sideways | Remove the relay from the socket

Operation

After installation always apply the rated voltage to the coil to check correct operation. Long term storage may corrode the silver on the relay pins. When plugging the relay into the socket, the female bifurcated or trifurcated receivers will automatically cut through the corrosion on the pins and guarantee a reliable connection.

Before actual use of relays, it is advised to switch the load several times with the contacts. The contacts will both be electrically and mechanically cleaned due to the positive wiping action. Sometimes a contact can build up increased contact resistance (≤ 15 mΩ when new). When using silver contacts one can clean the contact by switching a contact load a few times using >24 VDC & ~ 2A. Increased contact resistance is not always problematic, as it depends on circuit conditions. In general a contact resistance of 1 Ω is no problem, consult Mors Smitt for more information.

Condensation in the relay is possible when the coil is energised (warm) and the outside, environmental temperature is cold. This is a normal phenomenon and will not affect the function of the relay. Materials in the relay have no hygroscopic properties.

Inspection / maintenance

Correct operation of the relay can easily be checked as the transparent cover provides good visibility of the moving contacts. If the relay does not seem to operate correctly, check for presence of the appropriate coil voltage and polarity using a suitable multimeter. If coil voltage is present, but the relay does not operate, a short circuit of the suppression diode is possible (This may have been reversed due to the coil connection).

Relays can easily be tested with the Mors Smitt Relay Tester. More information on: www.morssmitt.com.

If the relay doesn't work after inspection, replace the relay unit with a similar model. Do not attempt to open the relay cover or try to repair. Contacts are calibrated and in balance, touching can affect proper operation. Also resoldering may affect correct operation. Since 2009 relays have tamper proof seals fitted and once broken, warranty is void.

Most relay defects are caused by installation faults such as overvoltage, spikes/transients, high/short current far exceeding the relay specifications. When returning the relays for investigation, please provide all information on the RMA form. Send defective relays back to the manufacturer for repair or replacement. Normal wear and tear or external causes are excluded from warranty.

RMA procedure see www.morssmitt.com

Relay module
D8M-U200

Ordering scheme

D8M-U2								
Coil voltages	01						24 VDC	
	02						48 VDC	
	03						72 VDC	
	04						110 VDC	
	05						96 VDC	
	06						12 VDC	
	07						36 VDC	
Contact data		B800					Latching (bistable) - 8 C/O contacts	Cannot be combined with:
		D800					Instantaneous - 8 C/O contacts	
Options			C				Low temperature - Max contact current 8 A	
(add as many options as needed)			D				Back EMF protection diode (for latching versions)	
			E				Gold plated contacts	M
			K				Extra dust protection, IP50 (relay only)	
			N				No magnetic arc blow-out	
			Q				Double zener diode	
			R				35 mm rail mounting	
Special options								
(minimum order quantity: 20)			M				$AgSnO_2$ contacts, highly resistant to welding	E
Connection					V88		Spring clamp connection (standard)	
					V89		Faston connection	

Example: D8M-U201-B800-DE-V88
Description: Latching relay, 8 contacts, Unom: 24 VDC, back EMF protection diode, gold plated contacts, spring clamp connection

Example: D8M-U204-D800-M-V89
Description: Instantaneous relay, 8 contacts, Unom: 110 VDC, $AgSnO_2$ contacts, Faston connection

Over 10 million Mors Smitt relays in use in rail transport applications worldwide!

Mors Smitt Asia Ltd.
Unit B & C, 25/F., Casey Aberdeen House
38 Heung Yip Road, Wong Chuk Hang
Hong Kong
Tel: +852 2343 555
sales.msa@wabtec.com

Mors Smitt France SAS
2 Rue de la Mandinière
72300 Sablé-sur-Sarthe, France
Tel: +33 (0) 243 92 82 00
sales.msf@wabtec.com

Mors Smitt UK Ltd.
Graycar Business Park,
Burton on Trent, DE13 8EN, UK
Tel: +44 (0)1283 357 263
sales.msuk@wabtec.com

Wabtec Netherlands B.V.
Vrieslantlaan 6,
3526 AA, Utrecht, Netherlands
Tel: +31 (0)30 288 1311
sales.msbv@wabtec.com

Mors Smitt Technologies Ltd.
1010 Johnson Drive,
Buffalo Grove, IL 60089-6918, USA
Tel: +1 847 777 6497
salesmst@wabtec.com

RMS Mors Smitt
6 Anzed Court,
Mulgrave, VIC 3170, Australia
Tel: +61 (0)3 8544 1200
sales.rms@wabtec.com